For wood, concrete and steel attachment see Roof Anchorage Detail, Form No. CB-62.

Welded Isolation springs housingare standard. For bolted spring housing, neoprene pads and spring cups see Weldment and Bolting Detail, Form No. CB-61

# STRUCTURALLY CALCULATED VIBRATION ISOLATION ROOF CURB FOR LX SERIES SMALL CHASSIS UNITS

P***A CABINET

| PROVENT P/N | A | B | EST. WEIGHT |
|---|---|---|---|
| CBISCLXS18* | 8" | 18" | 180 Lbs. |
| CBISCLXS21** | 11" | 21" | 195 Lbs. |
| CBISCLXS24** | 14" | 24" | 210 Lbs. |

**Note: Spring configuration must be added to part number at time of order

Weight of upper portion supported by spring isolators= 111 Lbs.

Meets seismic requirements for the following codes:
CBC 2022
IBC 2021

## FEATURES

- Roof curbs sides and ends are 14 ga.
- Fully welded construction.
- Gasketing package provided.
- Heat treated wood nailer provided.
- insulated deck pans provided.
- Pitched curbs and taller curbs are available.
- CalDyn OSHPd pre-approved seismic restraints. (OPM-0401-13), (CQA).

## NOTES

- Attach ductwork to roof curb. Flanges of duct rest on top of the curb, Support ductwork below the curb.
- Thru the curb utillities are available. Contact you York distributor or Provent directly.

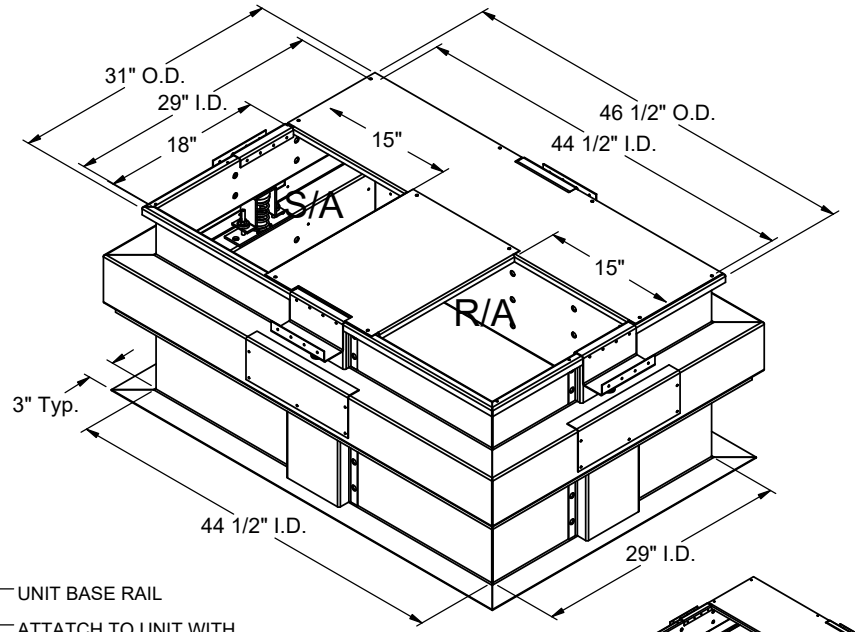


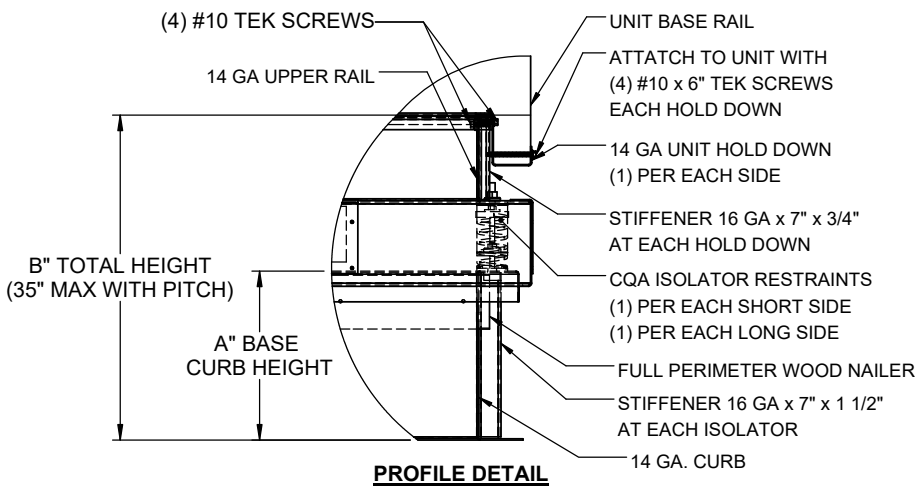


**PROFILE DETAIL**

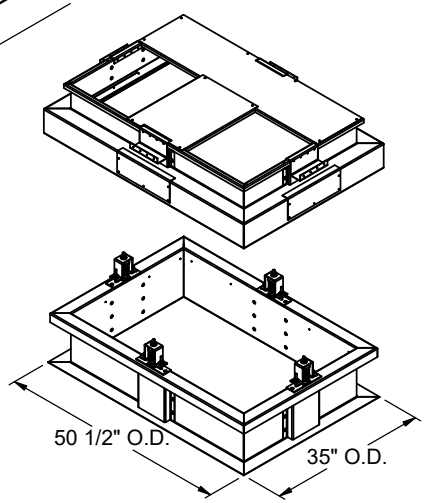


REGISTERED PROFESSIONAL ENGINEER
GLENN A. MOURITZEN
SE 3578
Exp. 6/30/25
STRUCTURAL
STATE OF CALIFORNIA


ProVent

3847 WABASH DRIVE
MIRA LOMA, CA 91752

PHONE (951) 685-1101
FAX (619) 872-9799


SUBMITED TO:
COMPANY:
JOB NAME:
EQUIPMENT:
NOTES:

| FORM NO: | PART NUMBER: | |
|---|---|---|
| CBISC-01 | - | |
| DATE: | REV: | DRAWN BY: |
| 7/28/2023 | 5 | JG |